PUBLISHED: 02-DEC-2016
2017.0 DISCOVERY (LR), 308-07

TRANSFER CASE - [+] TWIN SPEED TRANSFER CASE

DESCRIPTION AND OPERATION

COMPONENT LOCATION

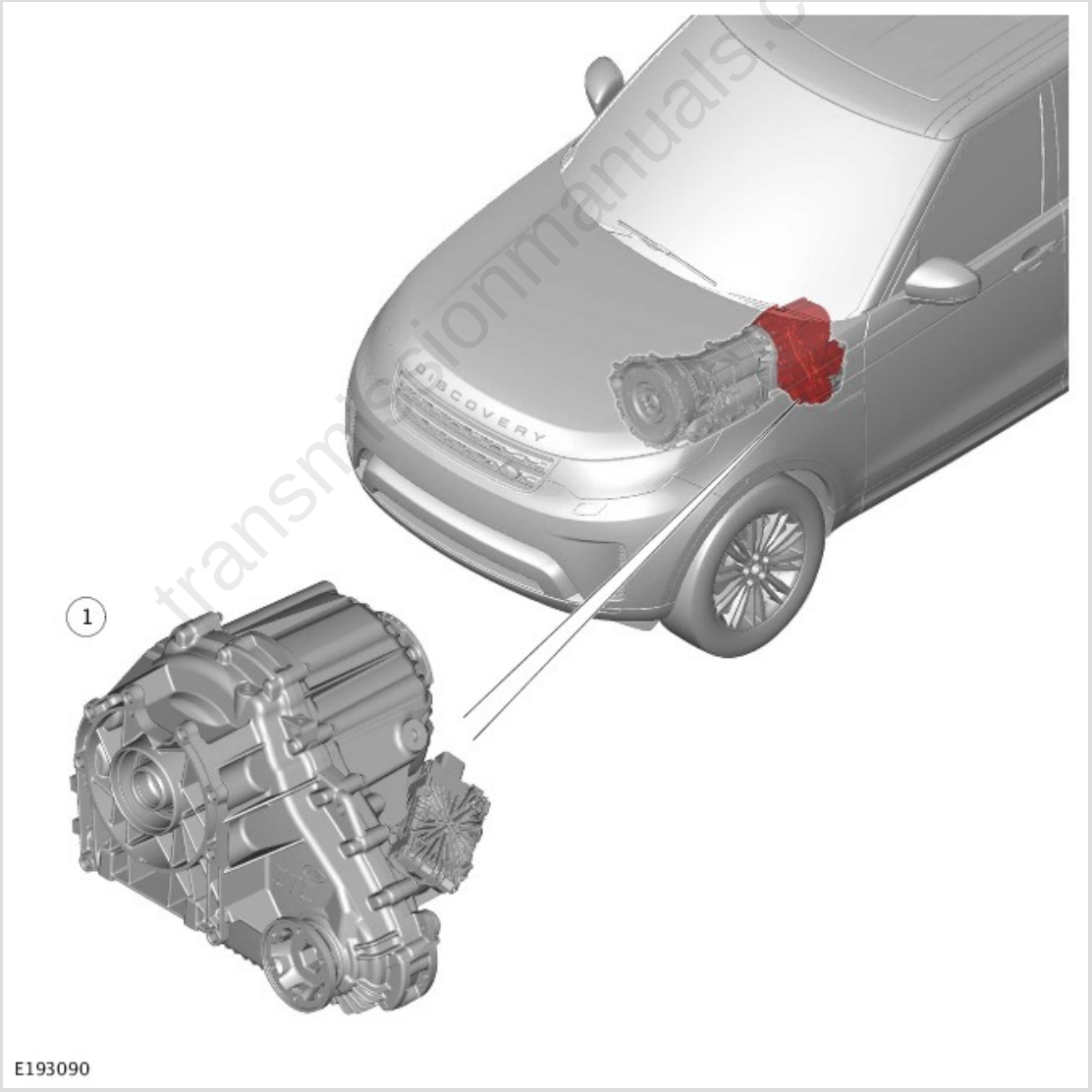

transmissionmanuals.com

ITEM	DESCRIPTION

1	Twin Speed Transfer Case (TC)

OVERVIEW

The twin speed transfer case is full time, permanent all wheel drive unit, with 50/50 torque distribution to the front and rear driveshafts. The transfer case is identical for all engine derivatives and supports the following features:

- Permanent all wheel drive with a bevel gear center differential, providing a 50:50 torque split
- Selectable high and low range for optimum on-road and off-road performance
- A pre-loading function, increasing locking torque with increased driving torque
- A slip controller to increase locking torque under off-road conditions and decrease locking torque for optimum comfort, for example during parking.

The twin speed transfer case is located under the vehicle and is mounted on the cross member, behind the automatic transmission.

The input torque is equally distributed via a bevel gear center differential. In order to provide an optimal torque distribution to each wheel in all driving conditions, the twin speed transfer case is equipped with an electronically controlled locking and torque-biasing device. This device detects wheel slip via various vehicle system inputs to the Transfer Case Control Module (TCCM) and locks the differential accordingly. The locking torque is applied through a multiplate clutch assembly.

A planetary gear set, located in the differential assembly, allows the driver to select high or low range. In low range, the planetary gear set provides a ratio of 2.93:1, which gives the vehicle an extremely low crawl speed for off-road driving and trailer towing. High range is a direct drive from the transmission output shaft and provides a 1:1 ratio.

The oil used in the transfer case is specially developed and contains unique additives, which enhance the transfer case operation. No other oil must be used in the transfer case.

A unique type of grease, fitting grease Weicon TL7391, must be applied to the transfer case input shaft spline when installing the transfer case.

transmissionmanuals.com

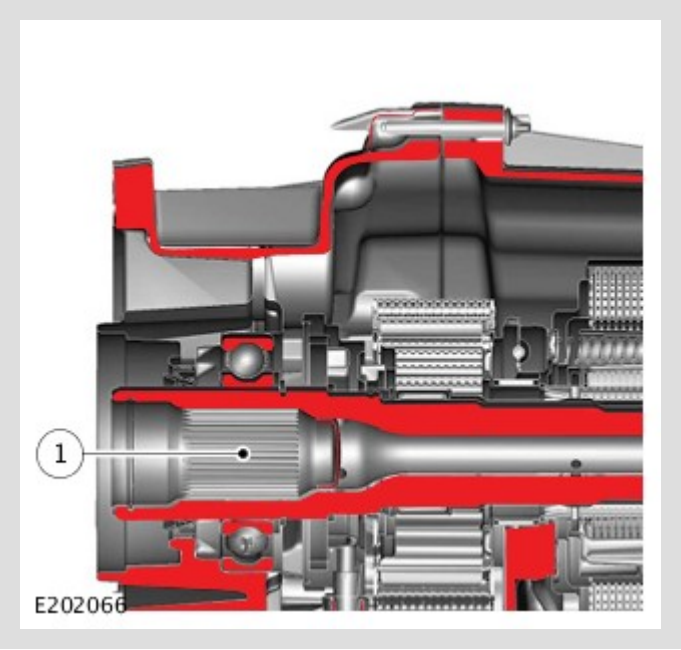

ITEM	DESCRIPTION
1	Input shaft spline

DESCRIPTION

TRANSFER CASE EXPLODED VIEW

transmissionmanuals.com

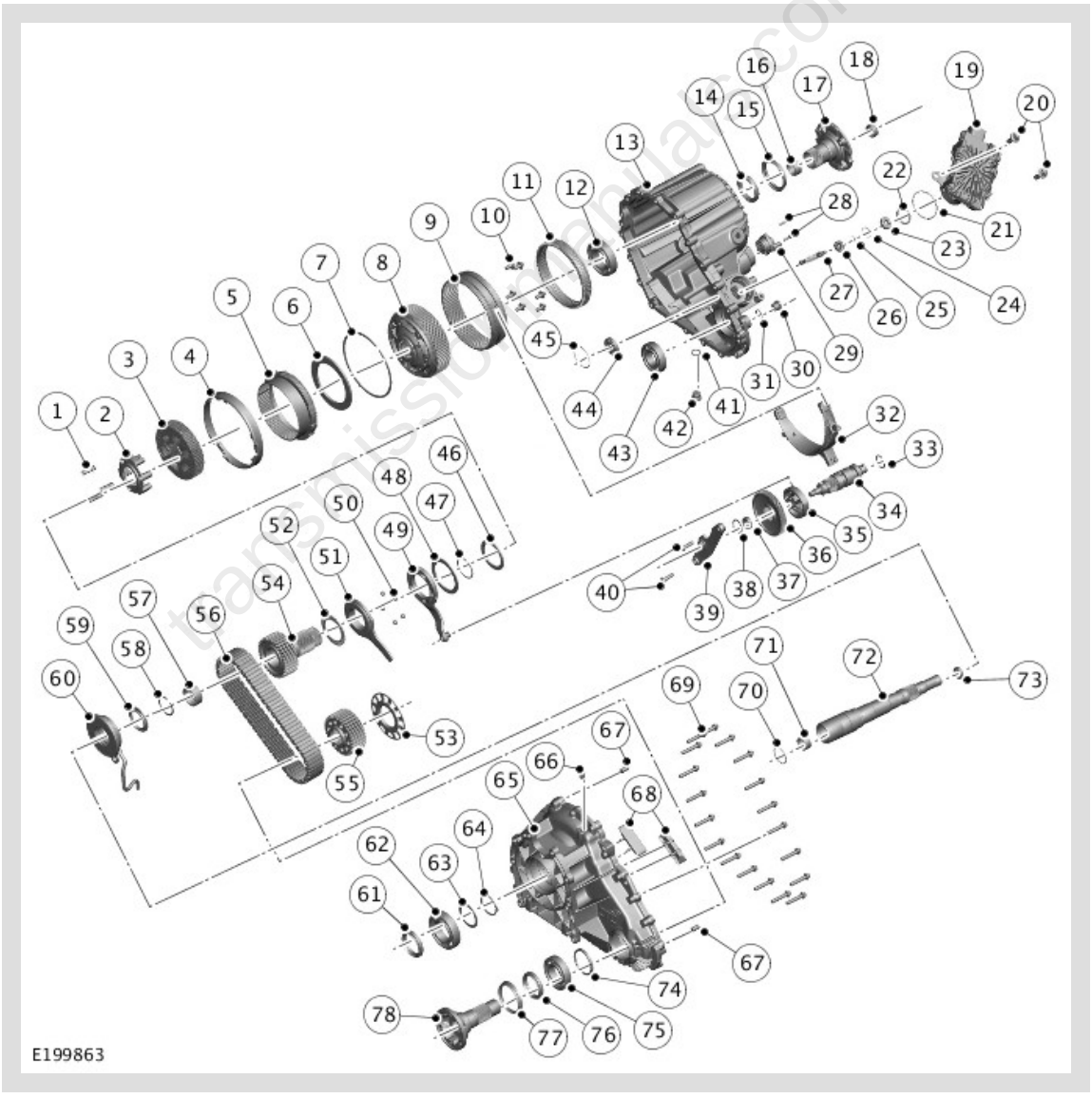

ITEM	DESCRIPTION
1	Synchronization spring (3 off)

2	Spring bracket
3	Multiplate clutch (10 – friction plates, 10 – steel plates)
4	Synchronization cup
5	Drum clutch
6	Plate clutch pack
7	Synchronization spring
8	Differential assembly
9	Shifting sleeve
10	Screw (6 off)
11	Synchronizer
12	Bearing
13	Rear housing
14	Transfer case output seal
15	O-ring seal
16	Bearing needle
17	Rear output flange
18	Bearing needle
19	Transfer Case Control Module (TCCM)
20	Bolt (2 off)
21	O-ring
22	O-ring
23	Transfer Case Control Module (TCCM) seal
24	Retaining ring
25	Retaining ring
26	Transfer case motor shaft bearing
27	Transfer case motor shaft
28	Bolt (2 off)
29	High/low range position sensor
30	Filler Plug
31	Shim
32	Shifting fork - High/Low range
33	Circlip

transmissionmanuals.com

34	Transfer case actuator shaft
35	Clutch control disc
36	Gear
37	Actuator shaft bearing
38	Circlip
39	Actuator shaft bearing bracket
40	Bolt (2 off)
41	Shim
42	Drain plug
43	Transfer case housing bearing
44	Bearing
45	Circlip
46	Retaining ring
47	Retaining ring
48	Bearing needle
49	Clutch lever
50	Ball (5 off)
51	Fixed lever
52	Bearing needle
53	Reluctor ring
54	Drive chain sprocket
55	Drive chain sprocket
56	Drive chain
57	Needle roller bearing
58	Retaining ring
59	Oil pump - spacer ring
60	Oil pump
61	O-ring seal
62	Bearing Retaining ring
63	Shim
64	Circlip
65	Front housing

transmissionmanuals.com

66	Adapter vent Screw (2 off)
67	Dowel pin (2 off)
68	Chain guide (2 off)
69	Bolt (19 off)
70	O-ring
71	Input shaft plug
72	Input shaft
73	Needle roller bearing
74	Circlip
75	Front output flange bearing
76	Front output flange seal
77	Front output flange seal ring
78	Front output flange

TRANSFER CASE - SECTIONAL VIEW

transmissionmanuals.com

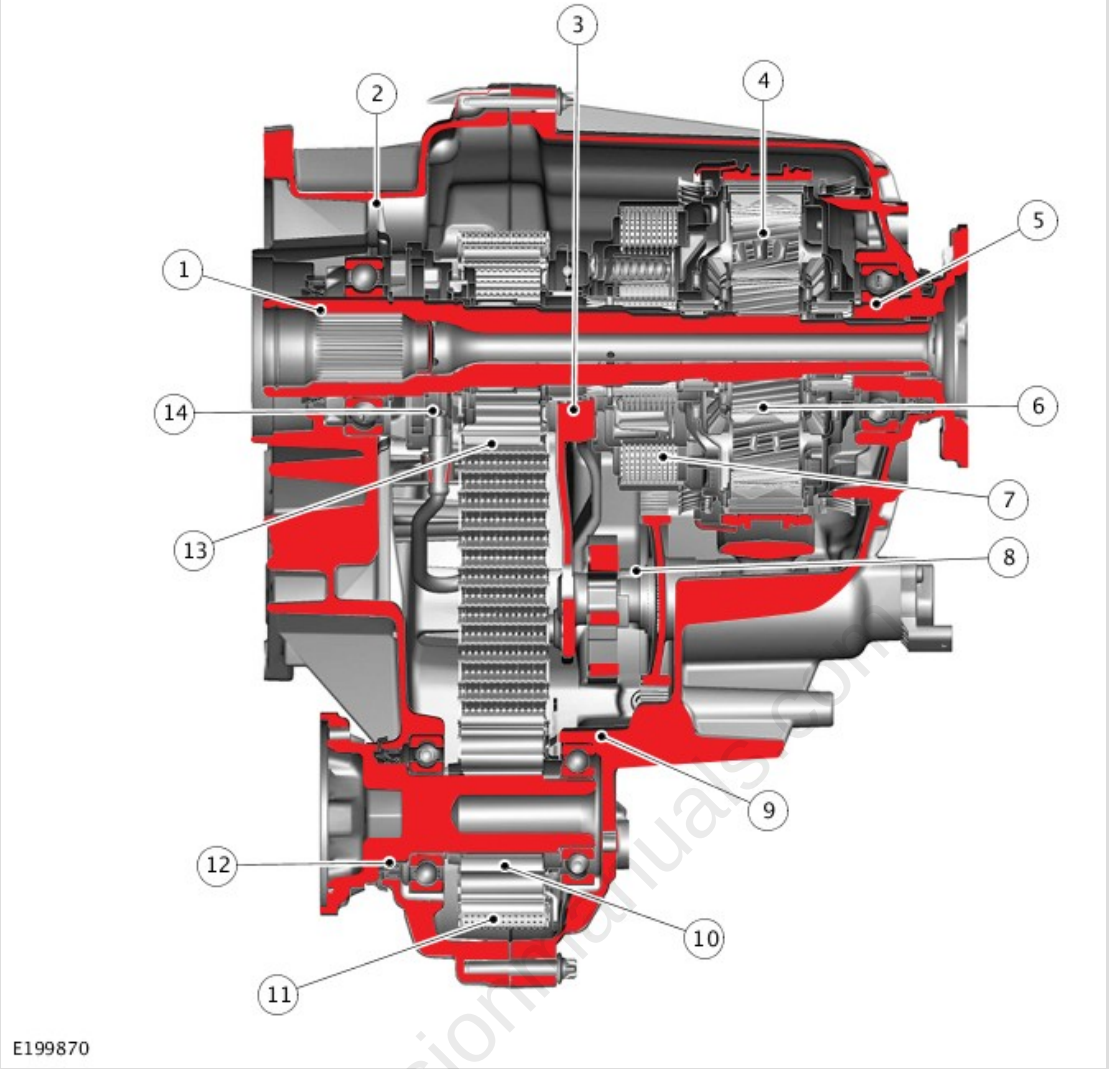

ITEM	DESCRIPTION
1	Input shaft
2	Front housing assembly
3	Clutch lever
4	Planetary gear set
5	Rear output flange
6	Center differential assembly
7	Multiplate clutch
8	Actuation shaft
9	Rear housing assembly
10	Front output sprocket
11	Chain drive
12	Front output flange

13	Drive sprocket
14	Oil pump assembly

TRANSFER CASE POWER FLOW

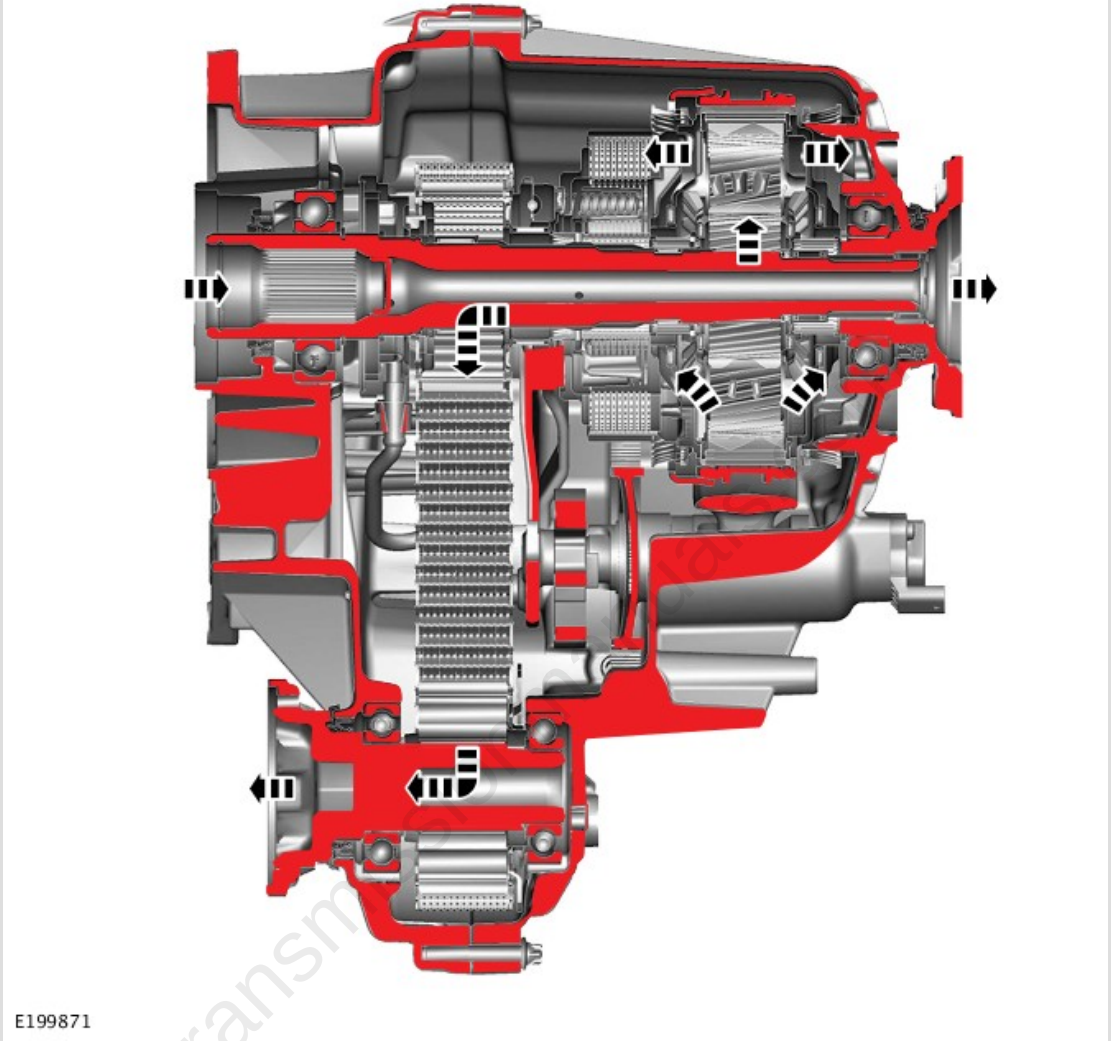

Output torque from the transmission is transferred to the input shaft of the transfer case and then onto the planetary sun gear and planetary pinion gears. The planetary pinion gears are held in place by the planetary pinion shafts, which are connected to the differential carrier, and drive the differential pinion gears. The torque is then distributed to both the front and rear differential side gear, which are connected to the outputs of the transfer case. The rear differential side gear is connected directly to the rear output flange. The front differential side gear is connected to the chain drive sprocket and therefore to the chain drive, which provides front output flange rotation.

Front Casing Assembly

The front casing assembly provides the location for the input shaft bearing, the front output flange bearing and the oil pump. It is also equipped with threaded holes to mount the chassis mounting bush, two lifting eyes and a breather cartridge for the

transfer case breather pipe. The breather pipe allows equalization between atmospheric and internal transfer case pressure.

The front casing has two snubbers, one on drive side of the chain and one on the coast side, which are secured with two screws. The snubbers are suppressing chain vibrations which can occur under medium acceleration conditions, therefore improving Noise, Vibration and Harshness (NVH) issues. During normal operation the drive chain does not contact the snubbers.

Oil Pump

An oil pump assembly is located in the front casing to provide lubrication for the bearings and rotary components through cross-drillings in the input shaft. A flat-sectioned coupling on the input shaft drives the rotor of the pump, the stator is fixed to the front housing assembly. A tube is attached to the pump, which leads into a calm suction area at the bottom of the two casing assemblies. The collector magnet in the suction area of the pump collects any metallic debris.

Rear Casing Assembly

The rear casing assembly provides the location for the rear output flange bearing, the transfer case motor and the oil filler and drain plug. Fins are cast into the rear casing assembly to improve heat dissipation. The part number and serial number are printed on a bar code label, which is bonded to the rear casing assembly.

Chain Drive

The chain-drive transfers drive from the center differential to the front output flange. The drive chain connects the drive chain sprocket on the transfer case input shaft with the drive chain sprocket on the front output flange. As both sprockets have the same number of teeth, the rotational speed of both sprockets is identical.

Center Differential

transmissionmanuals.com

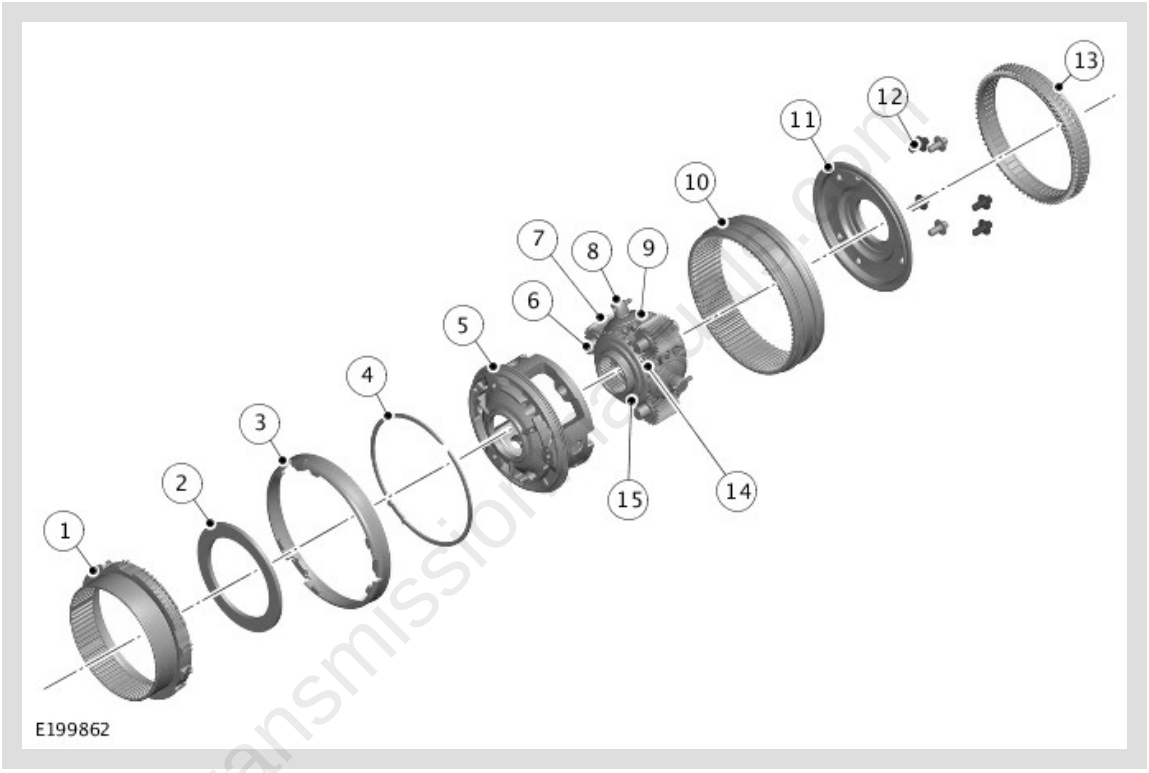

ITEM	DESCRIPTION
1	Drum clutch
2	Plate clutch pack
3	Synchronization cup
4	Synchronization spring
5	Differential carrier
6	Planetary pinion gear shaft (3 off)
7	Planetary pinion gear (3 off)
8	Pinion gear shaft (3 off)
9	Pinion gear (3 off)

10	Shifting sleeve
11	Multiplate clutch basket
12	Bolts (6 off)
13	Synchronizer sleeve
14	Planetary sun gear
15	Differential side gear (2 off)

The center differential assembly is the primary feature of the twin speed transfer case. Torque is transmitted through the center differential carrier and distributed to the differential gears and the front and rear output flanges. The planetary gear set, for the high/low range change function, is also an integral part of the center differential assembly.

The assembly comprises three differential pinion gears and shafts, which are equally spaced within the center differential carrier. The differential shafts have a rigid connection to the differential carrier. Three planetary pinion gears and shafts are located between the pinion gears. The planetary sun gear and two differential side gears are located in the centerline of the differential carrier.

The planetary ring gear is supported in both directions by the differential casing and the differential cover. The planetary ring gear is connected to a shifting sleeve, which is engaged in either high or low range.

The multiplate clutch basket, which is welded to the differential casing, supports the friction plates. The dogteeth, synchronization cup and synchronization spring supports high range engagement for the range change function.

transmissionmanuals.com

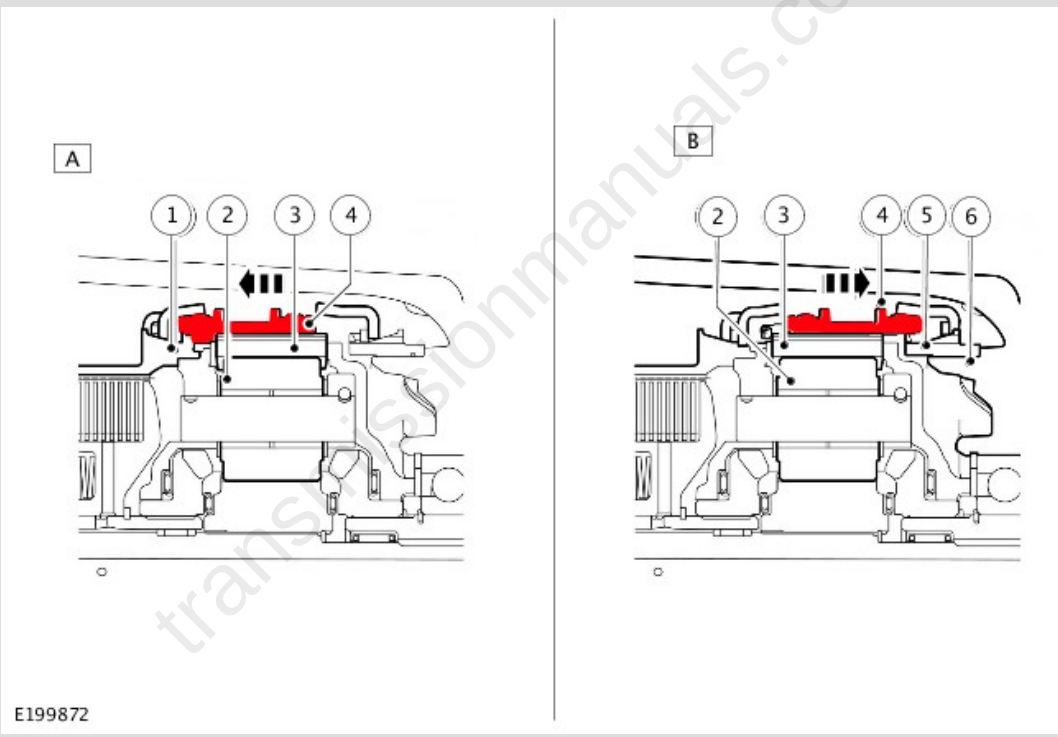

transmissionmanuals.com

ITEM	DESCRIPTION
A	High range position
B	Low range position
1	Dogteeth
2	Planetary pinion gears
3	Planetary ring gear
4	Shifting sleeve

5	Low range dogteeth
6	Rear carrier assembly

When high range is engaged, the shifting sleeve connects to the differential carrier via dogteeth. The planetary ring gear, via the shifting sleeve, and the planetary pinion gears, via the planetary shafts are also attached to the differential carrier. The planetary gear set rotates as one unit and therefore turns the differential side gear with a 1:1 ratio.

In low range, the motor moves the shifting sleeve in the direction of the low range dogteeth. The low range dogteeth is fixed to the rear carrier assembly. When the shifting sleeve is engaged with the low range dogteeth, the planetary ring gear, via the shifting sleeve, is stationary and the planetary pinion gears, via the planetary bolts, turn the differential side gears with 2.93: 1 ratio.

Multiplate Clutch Assembly

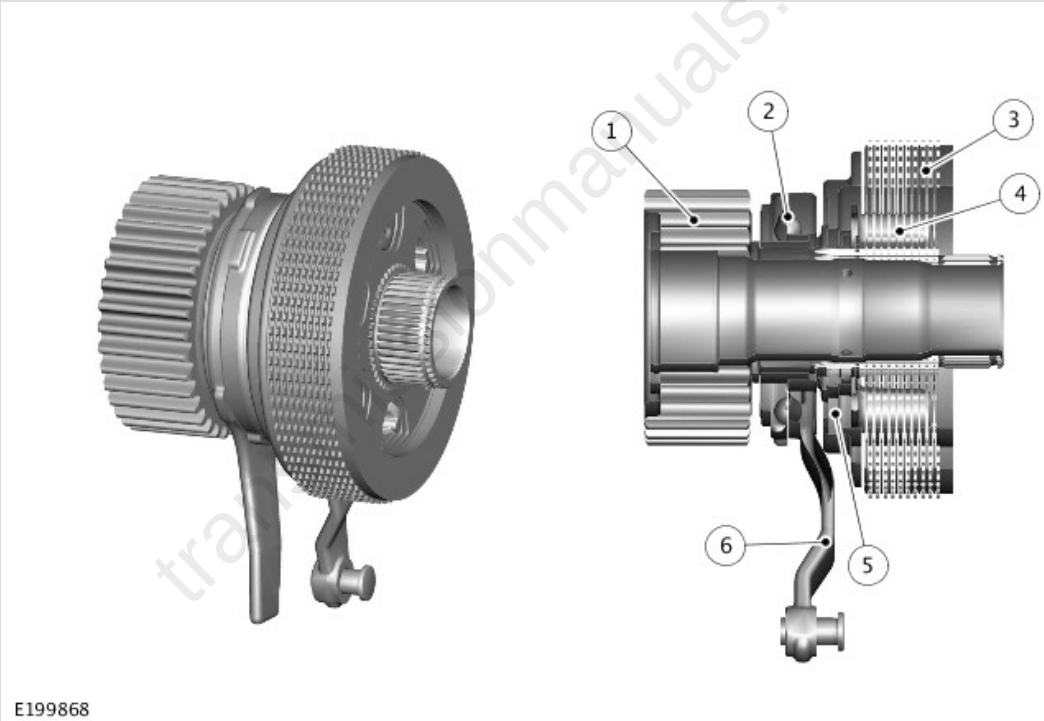

ITEM	DESCRIPTION
1	Drive chain sprocket
2	Ball ramp mechanism
3	Clutch plates
4	Cup springs
5	Clutch piston
6	Clutch lever

The aim of the multiplate clutch assembly is to prevent excessive differential slip and therefore maximize the traction performance of the vehicle. This is fundamentally different from the 'braked' traction control, which can only counteract differential slip when it occurs.

A certain amount of differential slip is required to allow the vehicle to turn corners and to remain stable under control of the Anti-lock Brake System (ABS). The Transfer Case Control Module (TCCM) monitors the drivers demands through the primary vehicle controls and automatically sets the slip torque at the differential. The system is completely automatic and does not require any special driver input.

The multiplate clutch assembly actively controls the torque flow through the center differential and optimizes the torque distribution in the driveline. The multiplate clutch assembly biases the torque from the transmission to the front differential or rear differential and wheels with the higher grip. This torque biasing prevents the wheels with the lower grip from spinning.

The multiplate clutch assembly comprises:

- A drive chain sprocket, which is connected to the front differential side gear
- Clutch levers with the ball ramp mechanism
- Clutch hub as support for the clutch plates
- Clutch piston to generate friction between the clutch plates
- Pack of cup springs to return the clutch piston into its original position.

One set of friction plates are connected to the clutch hub, the other set of friction plates are connected to the multiplate clutch basket, which is welded to the center differential housing.

transmissionmanuals.com

Multiplate Clutch Actuation

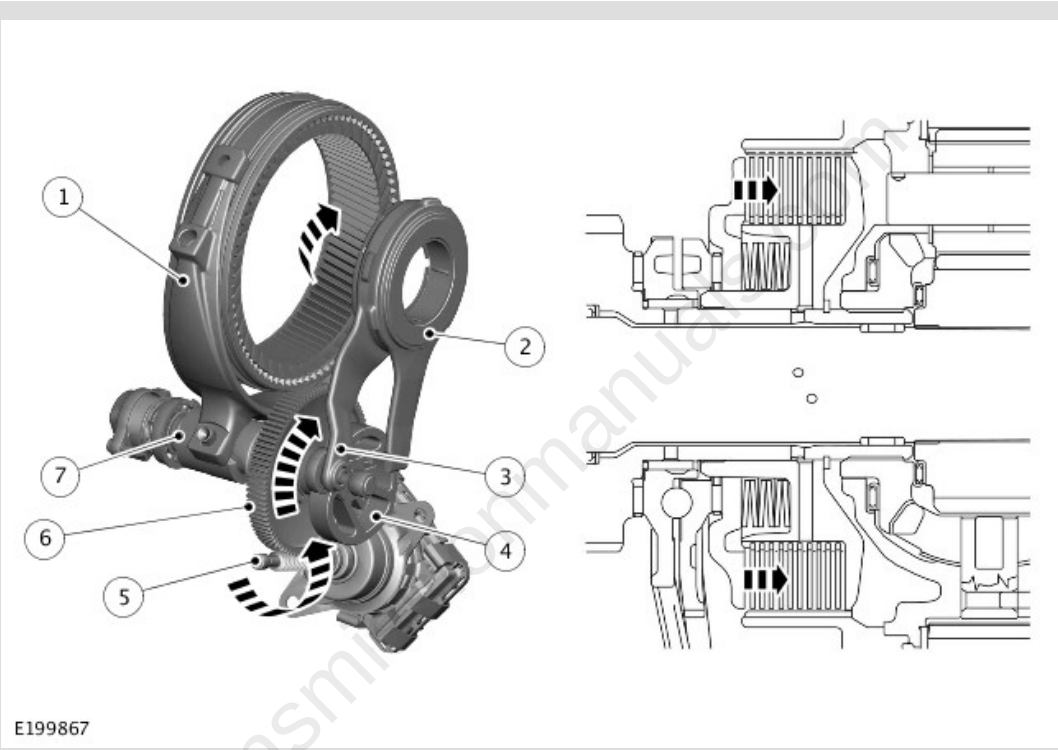

ITEM	DESCRIPTION
1	Shifting fork - High/Low range
2	Fixed lever
3	Clutch lever
4	Clutch control disc
5	Transfer case motor shaft
6	Gear
7	Actuation shaft

Transfer Case Motor Position For Clutch Control Mode

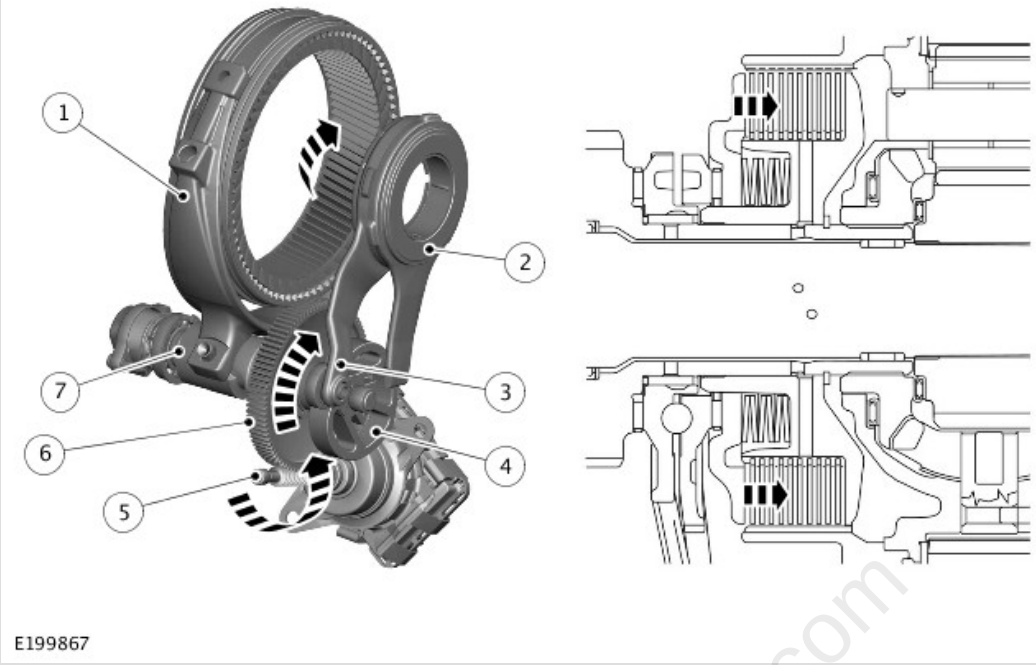

ITEM	DESCRIPTION
1	Shifting fork - High/Low range
2	Fixed lever
3	Clutch lever
4	Clutch control disc
5	Motor shaft
6	Gear
7	Actuation shaft

transmissionmanuals.com

During range change operation, when the multiplate clutch is open, the center differential cannot be locked and the torque cannot be biased. Once the range change is complete the system returns to clutch control mode.

High Range Actuation Sequence

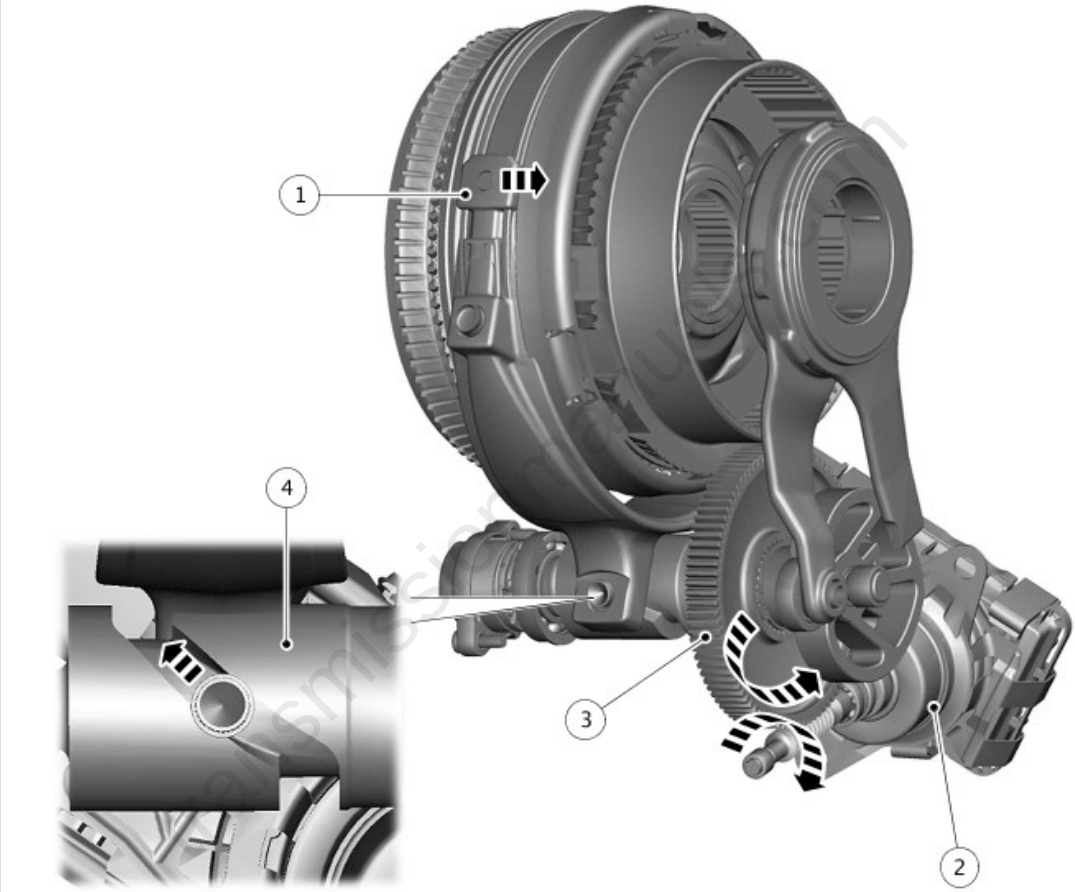

ITEM	DESCRIPTION
1	Shifting fork - High/Low range
2	Transfer Case Control Module (TCCM)
3	Gear
4	Actuation shaft

The rotational movement of the actuation shaft moves the shifting fork - High/Low range to the high range position. The shifting fork - High/Low range then moves the

shifting sleeve into the high range position. After the synchronization sequence, the planetary ring gear is connected to the high range dogteeth, via the shifting sleeve, on the differential carrier. In this position the input speed equals the output speed, which equates to a high range ratio of 1:1.

Low Range Actuation Sequence



ITEM	DESCRIPTION
1	Shifting fork - High/Low range
2	Transfer Case Control Module (TCCM)
3	Gear
4	Actuation shaft

The rotational movement of the actuation shaft moves the shifting fork - High/Low range to low range position. The shifting fork - High/Low range then moves the shifting sleeve into the low range position. The planetary ring gear is then connected to the low

range dogteeth, via the shifting sleeve, on the rear carrier assembly. The output speed is then reduced by a ratio of 2.93:1.

NOTE:

During the range change process there is no clutch lever actuation and therefore torque biasing is not available during the range change process.

Transfer Case Control Module with Integrated Actuator



Transfer Case Control Module (TCCM) comprises an integrated control module and a brushless Direct Current (DC) motor. The TCCM is fitted to the twin speed transfer case. The integrated transfer case motor is controlled by the TCCM to operate both the high/low range change and the torque-biasing device (multiplate clutch).

The TCCM detects wheel slip and other vehicle conditions via various inputs from other control modules. The TCCM controls the multiplate clutch based on these inputs to provide optimal torque distribution to the front differential and rear differential. It also receives range change requests from the range change selection switch and controls high/low gear change. The multiple clutch control and range change actuation are achieved by the integrated transfer case motor via a worm gear which drives an actuation shaft. The TCCM monitors the rotational position of the integrated transfer case motor by a Hall effect sensor fitted within TCCM.

The actuation shaft rotational movement is monitored by a high/low range position sensor fitted in the transfer case. The electrical power and ground to the high/low range position sensor is provided by TCCM. The high/low range position sensor sends a Pulse Width Modulation (PWM) signal to the TCCM via hardwired connection.

transmissionmanuals.com

The TCCM is connected to the FlexRay bus and controls transfer case operation. The TCCM receives a power supply via a relay from:

- A 40A fuse link located in the Engine Junction Box (EJB)
- The power supply relay is controlled by the relay – extended ignition which is controlled by Body Control Module/Gateway Module (BCM/GWM) assembly.

If the TCCM is replaced, the Land Rover approved diagnostic system must be connected to the vehicle and the "New Module Replacement" procedure must be completed.
For additional information, refer to: Transfer Case (308-07C, Diagnosis and Testing).

Range Status Indication

The range change selection switch has a Light Emitting Diode (LED), this LED operates in three ways:

- The Light Emitting Diode (LED) illuminates when the twin speed transfer case is in low range.
- The Light Emitting Diode (LED) is switched off when the twin speed transfer case is in high range.
- The Light Emitting Diode (LED) is flashing when range change operation is in progress.

There will also be a message displayed in the Instrument Cluster (IC) message center, which can also inform the driver of any faults with the twin speed transfer case.

The low range status warning indicator in the IC has the following logic:

- The warning indicator illuminates when the twin speed transfer case is in low range.
- The warning indicator is switched off when the twin speed transfer case is in high range.
- The warning indicator is flashing when range change is pending or range change is in progress.

The following table shows the messages that can be displayed in the message center relating to the transfer case:

MESSAGE	DESCRIPTION	CHIME
'Low range selected'	Low range is engaged after a range change request.	None
Low Range	Low range is requested while vehicle speed is less than 2km/h (1.25 mph).	None

transmissionmanuals.com

Requested: Available when stationary	Change to Low range is available when vehicle is stationary.	
Low Range Requested: Select Neutral for Range Change	Low range is requested while vehicle is stationary and Transmission Control Switch (TCS) is not in Neutral (N). Change to Low range starts when Neutral (N) is selected on the TCS.	None
'High range selected'	High range is engaged after a range change request.	None
High Range Requested: Available below 60 km/h (37mph)	High range is requested while driving in low range with vehicle speed above 60 km/h (37 mph). Range change will start when vehicle speed is lower than 60 km/h (37 mph).	None None
High Range Requested: Select Neutral for Range Change	High range is requested while vehicle speed is below 60 km/h (37 mph) and Transmission Control Switch (TCS) position is not in Neutral (N). Change to High range starts when Neutral (N) is selected on the TCS.	None
Range Change Not Available	Range change is requested but not available due to: A fault in the system The supply voltage to the Transfer Case Control Module (TCCM) is below 10.5 V The oil temperature in the transfer case is below -30°C (-22°F).	None
Traction reduced	Center differential locking torque is not available due to a fault in system or lost communications between Instrument Cluster (IC) and Transfer Case Control Module (TCCM). Rear differential locking torque is not available due to a fault in system or lost communications between the IC and Rear Differential Control Module (RDCM) (if equipped).	None
Loss of Drive	Twin speed transfer case not in gear, no drive to wheels.	Yes

transmissionmanuals.com

Transfer Case Control Module Inputs/Outputs

- Power supply via a relay controlled by Body Control Module/Gateway Module (BCM /GWM) assembly
- Primary battery ground
- High/Low range position sensor ground.

The Transfer Case Control Module (TCCM) receives the following inputs:

- High/Low range position sensor signal
- FlexRay bus messages.

The Transfer Case Control Module (TCCM) sends the following outputs:

- High/Low range position signal power supply
- FlexRay bus messages.

Range Change Selection Switch

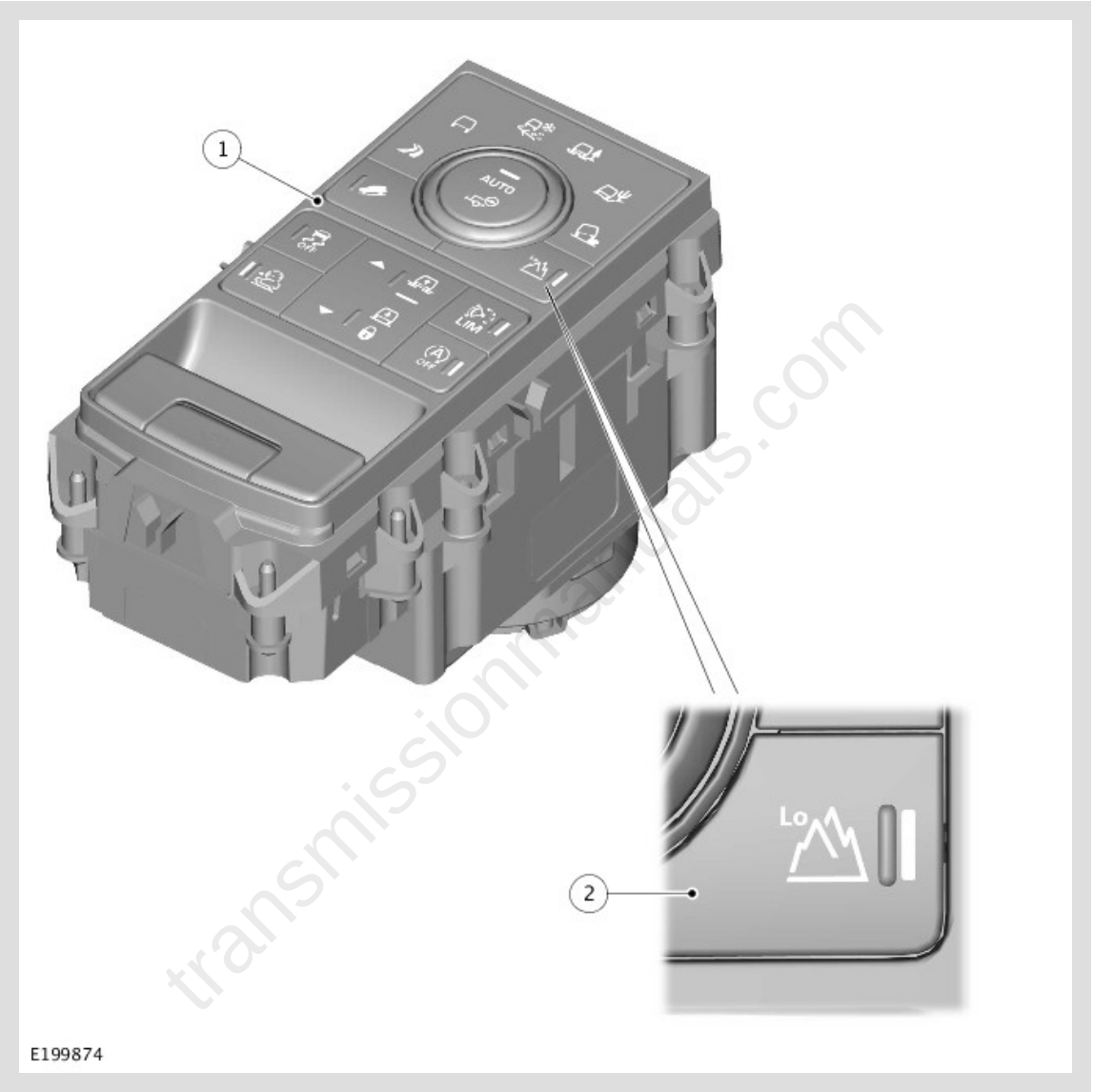

ITEM	DESCRIPTION
1	Terrain Response (TR) switchpack
2	Range change selection switch

The range change selection switch is a momentary switch and located in the Terrain Response (TR) switchpack, in the floor console.

When the range change selection switch is operated, the Terrain Response (TR) switchpack sends a message to the Body Control Module/Gateway Module (BCM/GWM)

assembly on the High Speed (HS) Controller Area Network (CAN) chassis systems bus. The BCM/GWM assembly transmits this message to the Transfer Case Control Module (TCCM) via FlexRay bus.

A single press of the range change selection switch will initiate range change if all the required conditions for range change are met. The range change request is delayed for 1 minute if the vehicle speed or the Transmission Control Switch (TCS) position are out of operating condition. When the request is delayed, a corresponding warning message is displayed in the Instrument Cluster (IC) message center.

If all the required conditions are met a single press of the range change selection switch will initiate range change in the twin speed transfer case.

The range change selection request is delayed for 1 minute, if:

- The vehicle speed for range change is above 60 km/h (37 mph)
- TCS not in the requested position.

While the request is delayed, driver can cancel the request by pressing the range change selection switch.

If the vehicle speed condition or the TCS position condition is not in the requested operating range within 1 minute, the range change request is cancelled.

Range change is available only when engine is running.

High/Low Range Change Light Emitting Diode

The high/low range change Light Emitting Diode (LED) is connected to the Terrain Response (TR) switchpack. Transfer Case Control Module (TCCM) sends the range change status by a FlexRay bus to the Body Control Module/Gateway Module (BCM /GWM) assembly. The BCM/GWM assembly transmits this signal through a High Speed (HS) Controller Area Network (CAN) chassis systems bus connection to the Terrain Response (TR). TR illuminates the high/low range change LED depending on the range change status from TCCM.

When the transfer case is in high range, the switch LED is not illuminated.

While range change is in progress, the LED will flash on until the new range status has been achieved.

High/Low Range Position Sensor

transmissionmanuals.com



The high/low range position sensor detects the rotational angle of the actuation shaft. The actuation shaft angle position is correlated to the high/low fork shift position and the clutch torque control position. The high/low range position sensor output controls the actuation shaft position with a Pulse Width Modulation (PWM) signal to the Transfer Case Control Module (TCCM). The high/low range position sensor output controls the actuation shaft whether the transfer case is in high or low range, or during range change. The high/low range position sensor output also controls the clutch torque control position while the system is in high or low range.

The TCCM check the actuation shaft position when TCCM wakes up and engine starts. The high/low range position sensor is connected to the TCCM via a 3-pin connector.

transmissionmanuals.com

OPERATION

High Range Operation

In high range, the torque output from the automatic transmission is passed to the transfer case input shaft. The position of the shifting sleeve couples the input shaft directly to the transfer case housing. The differential splits the torque between the two side gears. One side gear is connected by splines and passes the torque to the rear output flange. The second side gear is connected to the chain drive sprocket and passes the torque, via the drive chain, to the front output flange.

Low Range Operation

In low range, the torque output from the automatic transmission is passed to the transfer case input shaft. The shifting sleeve is moved rearwards and connects the planetary ring gear to the transfer case housing. The torque from the automatic transmission is now directed through the sun gear of the epicyclic gearset and, via the pinion gears and pinion gear shafts, into the planetary carrier. The annulus gear of the epicyclic gearset is secured inside the casing and generates the low range ratio of 2.93: 1. The torque is then passed, via the shifting sleeve, to the differential housing where it is split between the two side gears. One side gear is connected by splines and passes the torque to the rear output flange. The second side gear is connected to the chain drive sprocket and passes the torque, via the drive chain, to the front output flange. The vehicle will remain in the selected range unless the driver requests a change, for example it will not automatically revert to high range following an ignition off/on sequence.

Range Change Procedure

> **NOTE:**
>
> Changing from High range to Low range can be performed only when the vehicle is stationary.

Range change can be requested at any time while the engine is running. If the conditions are not met for range change, the Instrument Cluster (IC) will display the appropriate message in the message center. The message guides the driver to complete the range change and the low range warning indicator will flash. Once Neutral (N) is selected in the Transmission Control Switch (TCS), the TCS will be locked until the range change is completed.

The range change process can take several seconds to complete after a request is accepted. The actual time is dependent on a number of factors including:

- Transfer case temperature is out of range
- Component wear
- If the first attempt was unsuccessful.

Default/Limp-home Strategy

If a fault occurs with the transfer case, the Transfer Case Control Module (TCCM) or one of the required input signals (for example vehicle speed signal), the TCCM records a Diagnostic Trouble Code (DTC). The TCCM will respond appropriately to provide the highest level of system capability under the specific fault conditions. The following fault states are possible:

transmissionmanuals.com

Fault state	System response	Driver warning
Clutch control not available due to an over temperature	A driver warning message is displayed. The tractive capability or off-road capability of the vehicle is reduced temporarily.	Warning indicator and/or 'Traction Reduced' message in message center
Clutch control not available due to a permanent fault	A driver warning message is displayed. The tractive capability or off-road capability of the vehicle is reduced.	Warning indicator and/or 'Traction Reduced' message in message center
Transfer case is in Neutral	If engine starts while the transfer case is in Neutral (N) and the automatic transmission is not in Neutral (N). The Transfer Case Control Module (TCCM) sets a warning message and attempt to engage High range when Neutral (N) is selected on the Transmission Control Switch (TCS).	Flash low range indicator and 'High Range Requested: Select Neutral (N) for Range Change' message
Transfer case stuck in Neutral	As the transfer case is stuck between high and low range resulting in no drive to wheels, the Electric Park Brake (EPB) will automatically apply when Park position in the Transmission Control Switch (TCS) is selected or engine is turned off.	Flash low range indicator plus 'Loss of Drive' message
Range change not available	A driver warning message is displayed and range change is not performed. Range change is not available due to:	'Range Change not Available' on instrument pack if a range change is requested
	A fault in system	
	The supply voltage to Transfer Case Control Module (TCCM) is below 10.5 V	
	The oil temperature in the transfer case is below -30°C (-22° F).	
No functional degradation	A signal fault or Diagnostic Trouble Code (DTC) may be logged but no customer symptom if a back-up signal is available and used.	None

transmissionmanuals.com

If a component in the twin speed transfer case or the Transfer Case Control Module (TCCM) is overheated, the TCCM set a Diagnostic Trouble Code (DTC). The TCCM opens the clutch and 'Traction reduced' warning message is displayed. When the component is cooled down sufficiently, the clutch control is re-activated and the message will not displayed.

When a range change is completed in ambient temperature below 0°C (32°F), TCCM inhibits the next range change for 1 minute. This is to protect the TCCM and is design intent. 'Range change not available' message will be displayed if a range change is requested within this 1 minute without DTC.

TCCM has a recovery strategy from failures of transfer case neutral. When engine starts or it attempts to re-engage high range first and subsequently low range if high range engagement is still not achieved. A 'Select Neutral for Range change' message is displayed:

- If the twin speed transfer case is in Neutral (N) and TCCM is in recovery mode
- Transmission Control Switch (TCS) is not in Neutral (N) position which is required for range change.

If range change is requested and the requested range is not achieved, TCCM attempts to re-engage the previous range. If a requested range not achieved insists while vehicle is stationary, another range change request is recommended after vehicle moves a short distance or switch ignition off for the minimum 1 minute and start the engine.

TCS is locked in neutral position while TCCM is performing range change. This is a normal function and this also applies to a range change during the recovery mode.

CONTROL DIAGRAM

CONTROL DIAGRAM - TRANSFER CASE CONTROL MODULE

transmissionmanuals.com

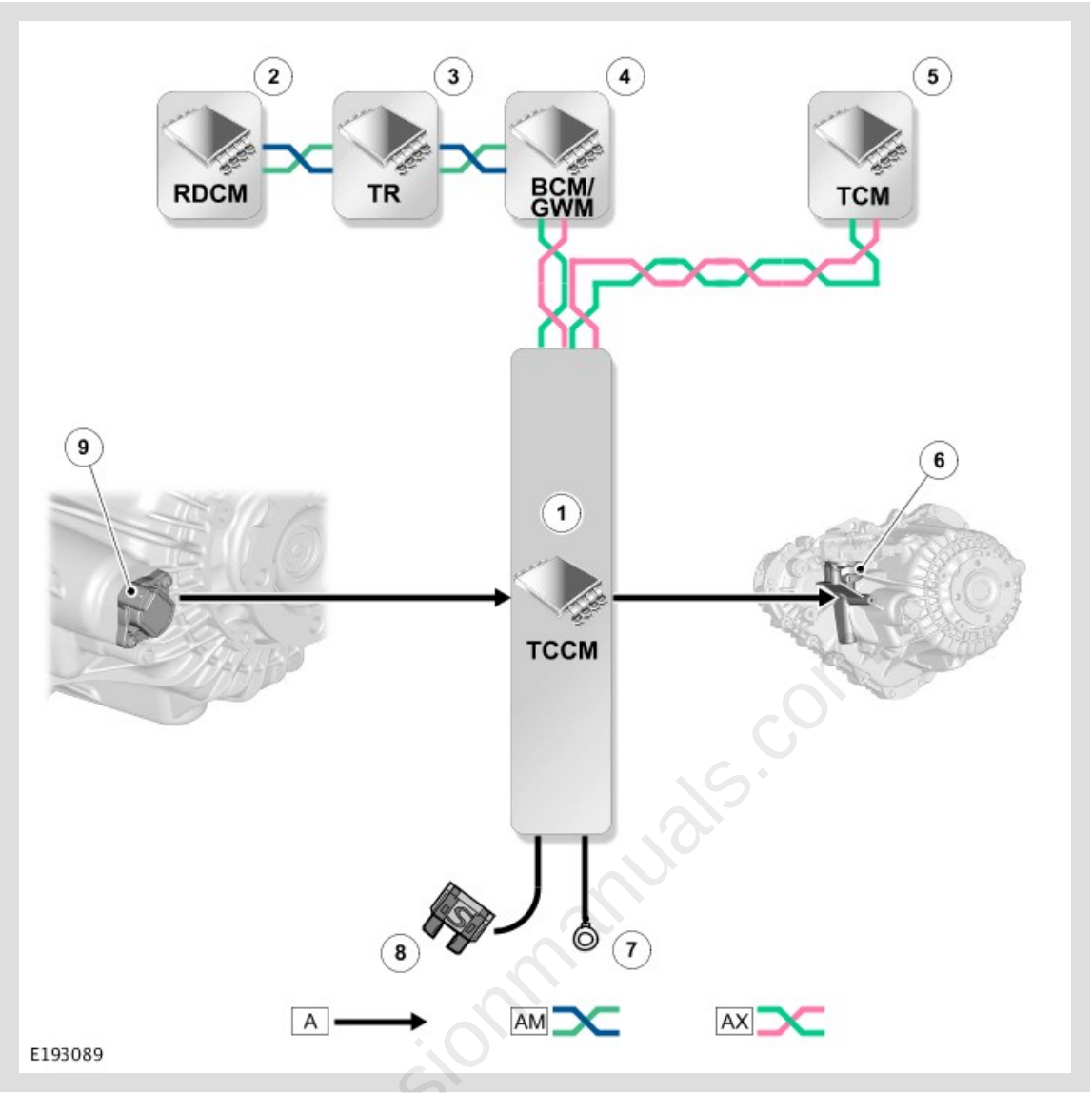

A = HARDWIRED: AM = HIGH SPEED (HS) CONTROLLER AREA NETWORK (CAN) CHASSIS SYSTEMS BUS: AX = FLEXRAY BUS.

ITEM	DESCRIPTION
1	Transfer Case Control Module (TCCM)
2	Rear Differential Control Module (RDCM) - If Equipped
3	Terrain Response (TR) switchpack - High/Low range selection switch
4	Body Control Module/Gateway Module (BCM/GWM) assembly
5	Transmission Control Module (TCM)
6	Transfer case actuator
7	Ground
8	Power supply
9	High/Low range position sensor

transmissionmanuals.com

transmissionmanuals.com